FUSTEQ SERIES

DIESEL GENERATOR
GROUPE ELECTROGENE DIESEL
GRUPO ELECTROGENO DIESEL
GRUPPO ELETTROGENO DIESEL

MODEL
MODELE
MODELO
MODELLO

PK 36 FQ

POWERED BY

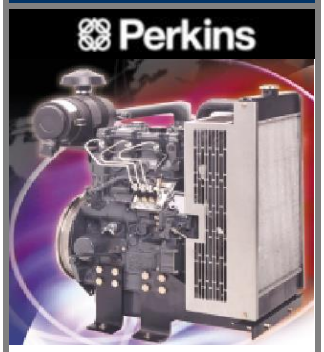

ULTRA SILENT VERSION

GENERATING SET PERFORMANCE PERFORMANCES DU GROUPE PRESTACIONES DEL GRUPO PRESTAZIONI DEL GRUPPO		50 Hz		60 Hz	
Voltage Voltage Voltaje Tensione		V	400 / 230	V	220 / 127
Continuous Power Puissance service continue Potencia servicio continuo Potenza servizio continuo	PRP	kVA	**30**	kVA	---
Stand-by Power Puissance service secours Potencia servicio emergencia Potenza servizio in emergenza	LTP	kVA	**33**	kVA	---
Continuous Power Puissance service continue Potencia servicio continuo Potenza servizio continuo	PRP	kWe	24	kWe	---
Stand-by Power Puissance service secours Potencia servicio emergencia Potenza servizio in emergenza	LTP	kWe	27	kWe	---
Power factor Facteur de puissance Factor de potencia Fattore di potenza	cos φ		0,8		---
Fuel consumption Consommation combustible Consumo de combustible Consumo combustibile	70 %	l/h	4,9	l/h	---
Noise level Niveau de bruit Nivel de ruido Livello rumorosità	dB(A)@7m	52dB(A) at 0% of load			
Limit ambient temperature Limite de la température ambiante Limite de la temperatura ambiente Limite di temperatura ambientale		55°C minimum			

TECNOGEN SpA - postal address: strada Ponteriglio, 25 – 29010 Pontenure (PC)- ITALY
Tel **+39 0523 512440** - Fax **+39 0523 504453** – E-mail: **export@tecnogen.com** - Web site: **www.tecnogen.com**

ENGINE MOTEUR MOTOR MOTORE		PERKINS			1103A-33G		
PERFORMANCE PERFORMANCES PRESTACIONES PRESTAZIONI		**1500 rpm**			**1800 rpm**		
Continuous Power Puissance service continue Potencia servicio continuo Potenza servizio continuo	PRP	kWm	27,9		kWm	32,9	
Stand-by Power Puissance service secours Potencia servicio emergencia Potenza servizio in emergenza	LTP	kWm	30,6		kWm	36,1	
Specific fuel consumption Consommation spécifique combustible Consumo especifico de combustibile Consumo specifico combustibile		g/kWh	50 % 75 % 100 % 110 %	232 214 211 214	g/kWh	50 % 75 % 100 % 110 %	251 227 221 222
Diesel 4 Stroke – Injection type Diesel 4 temps – Type injection Diesel 4 tiempos – Tipo de inyeccion Diesel a 4 tempi – Tipo di iniezione							Direct Directe Directa Diretta
Aspiration type Type d'aspiration Tipo de aspiracion Tipo d'aspirazione							Natural Naturel Natural Naturale
Cooling system Refroidissement Sistema de refrigeracion Raffreddamento							Water Eau Agua Acqua
Speed governor Régulateur de tours Regulador Regolatore di giri							Mechanical Mécanique Mecanico Meccanico
Cylinders, numbers and arrangement Nombre et disposition des cylindres Cilindros, numero y disposicion Numero e disposizione dei cilindri							3 L
Total displacement Cylindrée totale Cilindrata total Cilindrata totale						cm^3	3.300
Bore x stroke Alésage x course Diametro x carrera Alesaggio x corsa						mm	105.0 x 127.0
Compression ratio Rapport de compression Relación de compresión Rapporto di compressione							19.25 :1
Engine electric system voltage Voltage système électrique moteur Voltaje sistema eléctrico motor Voltaggio sistema elettrico motore							12 V
Derating for temperature Déclassement pour temperature Declasamiento para temperatura Declassamento per temperatura						0 ÷ 25°C > 25 °C	0 2 % / 10°C
Derating for altitude Déclassement pour altitude Declasamiento para altitud Declassamento per altitudine						0 ÷ 500 m 500 ÷ 1500 m 1500 ÷3000 m	0 4 % / 500 m 6 % / 500 m

ALTERNATOR ALTERNATEUR ALTERNADOR ALTERNATORE						MECCALTE
PERFORMANCE PERFORMANCES PRESTACIONES PRESTAZIONI		**1500 rpm**		**1800 rpm**		
Model Modèle Modelo Modello		ECP 28 VL/4		---		
Continuous Power Puissance service continue Potencia servicio continuo Potenza servizio continuo	40 °C	kVA kWe	**30** 24	KVA kWe	--- ---	
Stand-by Power Puissance service secours Potencia servicio emergencia Potenza servizio in emergenza	40 °C	KVA kVe	30,5 24,4	KVA kWe	--- ---	
Stand-by Power Puissance service secours Potencia servicio emergencia Potenza servizio in emergenza	27 °C	KVA kVe	**32,5** 26	KVA kWe	--- ---	
Efficiency Rendement Eficienza Efficienza		1/4 2/4 3/4 4/4	--- 86,5 % 88,5 % 88,1 %	1/4 2/4 3/4 4/4	--- --- --- ---	
Standard winding connections Liaison des bobinages Tipo de conexiòn Collegamento avvolgimenti		Y		YY		
Exciter Eccitatrice Excitador Eccitatrice	**brushless** rotating exciter design with solid state pivotante **sans brosses** avec pont de diodes pivotants puente de diodos **sin escobillas** rotantes rotante **senza spazzole** con ponte di diodi rotanti					
Poles Poles Polos Poli						4
Phases Phases Fases Fasi						3 + N
Wires Fils Hilos Morsetti						12
Voltage regulation Regulation Voltage Regulación voltaje Regolazione tensione						± 1 %
Waveform distortion Taux d'harmonique Distorciòn forma de onda Distorsione forma d'onda					THD	2.1/2
Insulation class Classe d' isolation Classe de aislamiento Classe di isolamento						H
Enclosure Degré de protection mécanique Grado de protecciòn mecanica Grado di protezione meccanica						IP 23
Maximun overspeed Survitesse Régimen màximo Velocità di fuga						2250 min
AVR model standard Modèle AVR standard Modelo AVR standard Modello AVR standard						**DSR**
Derating for temperature Déclassement pour temperature Declasamiento para temperatura Declassamento per temperatura					0 ÷ 40°C > 40 °C	0 3 % / 5°C
Derating for altitude Déclassement pour altitude Declasamiento para altitud Declassamento per altitudine					0 ÷ 1500 m 1500 ÷ 2500 m 2500 ÷ 3000 m	0 3% / 500 m 4% / 500 m

LOGISTIC INFORMATION
INFORMATIONS LOGISTIQUES
INFORMATION LOGISTICA
INFORMAZIONI LOGISTICHE

	Integrated fuel tank capacity Capacité reservoir intergré Capacidad Tanque integrado Capacità Serbatoio integrato		Weight Poids Peso Peso	Dimensions Cotes d'encombrement Medidas externas Dimensioni d'ingombro		
	(L.)			(cm)		
	STD	EXTRA1	(kg)	L	W	H
SOUND PROOF VERSION VERSION INSONORISEE VERSION INSONORISADA VERSIONE INSONORIZZATA	240	ON REQUEST	1420	230	98	153

GENSET STANDARD EQUIPMENT
EQUIPEMENT STANDARD GROUPE ELECTROGENE
EQUIPAMIENTO STANDARD GRUPO ELECTROGENO
EQUIPAGGIAMENTO STANDARD GRUPPO ELETTROGENO

GB	F	E	I
✓ Lifting eye ✓ Fully bunded fuel tank ✓ Integrated fuel tank ✓ Vibration dampers ✓ One or more electric fans controlled by Inverter VSi ✓ Manual autostart control panel **ACP7310AUS** with circuit breaker ✓ Battery ✓ Ultra silent canopy ✓ Residential silencer ✓ Fork lift guides	✓ Crochet de levage ✓ Bac de rétention ✓ Réservoir intégré ✓ Amortisseurs de vibration ✓ Un ou plusieurs ventilateurs électriques commandés par Inverter VSi ✓ Démarrage manuel autostart **ACP7310AUS** avec disjoncteur de protection ✓ Batterie ✓ Capotage ultra-silencieux ✓ Silencieux résidentielle ✓ Supports pour fourches	✓ Gancho central ✓ Tanque del combustible con sistema de recolección de líquidos ✓ Tanque de combustible integrado ✓ Sistema de amortiguación anti-vibrante ✓ Uno o más ventiladores eléctricos controlados para Inverter Vsi ✓ Cuadro manual autostart **ACP7310AUS** con interruptor magnetotérmico ✓ Batería ✓ Cabina ultra-silenciosa ✓ Silenciador residencial ✓ Supportes para carrettilla	✓ Gancio di sollevamento centrale ✓ Serbatoio con vasca di raccolta liquidi ✓ Serbatoio integrato ✓ Anti vibranti ✓ Una o più ventole elettriche controllate da tecnologia Inverter VSi ✓ Quadro di comando manuale autostart **ACP7310AUS** con interruttore magnetotermico ✓ Batteria ✓ Cabina ultra silenziosa ✓ Marmitta residenziale ✓ Porta forche

MANUAL AUTOSTART CONTROL PANEL
COFFRET ELECTRIQUE MANUEL AUTOSTART
CUADRO ELECTRICO MANUAL AUTOSTART
QUADRO ELETTRICO MANUALE AUTOSTART

ACP 7310 AUS

50A (400 V - 3 ph - 50Hz – 1500 rpm)
100A (220 V - 3 ph - 60Hz – 1800 rpm)

STANDARD EQUIPMENT:	EQUIPEMENT STANDARD:	EQUIPAMIENTO STANDARD:	EQUIPAGGIAMENTO STANDARD:
4 poles circuit breaker Electronic control board **DSE 7310** Control panel box key Emergency Stop button	Disjoncteur de protection 4 pôles Fiche électronique **DSE 7310** Clé pour serrure du coffret Interrupteur d'arrêt d'émergence	Interruptor magnetotermico 4 polos Carta electronica **DSE 7310** Llave cuadro Botón de parada de emergencia	Interruttore magnetotermico 4 poli Scheda elettronica **DSE 7310** Chiave quadro Pulsante di arresto di emergenza

DSE 7310

CONTROL BOARD
CARTE ELECTRONIQUE DE CONTROL
CARTA ELECTRONICA DE CONTROL
SCHEDA ELETTRONICA DI CONTROLLO

PROTECTIONS	PROTECTIONS	PROTECCIONES	PROTEZIONI
Low oil pressure	Basse pression huile moteur	Baja presión aceite	Bassa pressione olio
High engine temperature	Haute température moteur	Elevada temperatura motor	Alta temperatura motore
Low fuel level	Basse niveau combustible	Baja nivel carburante	Basso livello di carburante
Fail to start	Non démarrage	Falta de arranque	Mancato avviamento
Fail to stop	Non arrêt	Falta de parada	Mancato arresto
Emergency stop	Arrêt d'urgence	Parada de emergencia	Stop d'emergenza
Over/under generator frequency	Sur/sous générateu fréquence	Sobre/bajo generatore frecuencia	Sovra/sotto frequenza generatore
Over/under generator voltage	Sur/sous générateu voltage	Sobre/bajo generatore voltaje	Sovra/sotto voltaggio generatore
Over/under speed	Sur/sourvitesse	Sobre/bajo velocitad	Sovra/sotto velocità
Fuel level	Niveau de combustible	nivel de combustibile	Livello del carburante
Belt breakage	Rupture courroie	Ruptura correa	Rottura cinghia
Over current	Surcourant	Corriente maxima	Sovracorrente
Over/under battery voltage	Sur/sus la tension de batterie	Sobre/bajo voltaje de la batería	Sovra/sotto tensione della batteria
DIGITAL METERS	**VOYANT NUMERIQUE POUR**	**VISOR DIGITAL PARA**	**MISURATORE DIGITALE PER**
Generator volts (3 phases)	Voltmètre générateur (3 phases)	Voltimetro (3 fases)	Voltmetro tensione generatore (3 fasi)
Generator amperes (3 phases)	Ampèremètre générateur (3 phases)	Amperimetro (3 fases)	Amperometro generatore (3 fasi)
Generator frequency	Fréquencemètre générateur	Frecuencimetro	Frequenzimetro generatore
KW-meter	KW-mètre	KW- metro	KW- metro
kVA-meter	kVA- mètre	kVA- metro	kVA- metro
Cos φ- meter	Cos φ- mètre	Cos φ-metro	Cos φ-metro
Rpm meter	Tm mètre	Revolutiones por minuto metro	Gm metro
Gen set hours counter	Totalisateur d'heures de marche	Medida horas de marcha	Contaore di funzionamento gruppo
Battery Volts	Voltmètre batterie	Voltimetro batería	Voltmetro batteria

AUTOMATIC CONTROL PANEL
COFFRET ELECTRIQUE AUTOMATIQUE
CUADRO ELECTRICO AUTOMATICO
QUADRO ELETTRICO AUTOMATICO

1)

ACP 7320 ATS

COMPLETE CONTROL PANEL FREE STANDING TYPE
Equipment: control board, circuit breaker, battery charger, transfer switch, box key.

COFFRET ELECTRIQUE COMPLET TYPE ARMOIRE SEPARE DU GROUPE
Equipement : carte électronique de contrôle, disjoncteur de protection, chargeur de batterie, inverseur de source, clé coffret.

CUADRO ELECTRICO COMPLETO EN ARMARIO SEPARADO DEL GRUPO
Equipamiento: carta electronica de controllo, interruptor magnetotermico, cargador de bateria, transferencial, llave quadro.

QUADRO ELETTRICO COMPLETO SEPARATO DAL GRUPPO
Equipaggiamento: scheda elettronica di controllo, interruttore magnetotermico, carica batteria, telecommutazione e chiave quadro.

2)

ACP 7320 AMF

AMF CONTROL PANEL FITTED ON THE GEN-SET WITHOUT TRANSFER SWITCH
Equipment: control board, circuit breaker, battery charger, box key.

COFFRET ELECTRIQUE MONTE SUR LE GROUPE SANS INVERSEUR DE SOURCE
Equipement : carte électronique de contrôle, disjoncteur de protection, chargeur de batterie, clé coffret.

CUADRO ELECTRICO MONTADO SOBRE EL GRUPO SIN TRANSFERENCIAL
Equipamiento: carta electronica de controllo, interruptor magnetotermico, cargador de bateria, llave quadro.

QUADRO ELETTRICO MONTATO SUL GRUPPO ELETTROGENO SENZA TELECOMMUTAZIONE
Equipaggiamento: scheda elettronica di controllo, interruttore magnetotermico, carica batteria, chiave quadro.

3)

ACP 7320 STS

CONTROL PANEL FITTED ON THE GEN-SET WITH TRANSFER SWITCH SUPPLIED IN A SEPARATED BOX
Equipment: control board, circuit breaker, battery charger, box key, separate transfer switch.

COFFRET ELECTRIQUE MONTE SUR LE GROUPE + INVERSEUR DE SOURCE FOURNI DANS UN COFFRET SEPARE
Equipement : carte électronique de contrôle, disjoncteur de protection, chargeur de batterie, inverseur de source separé, clé coffret.

CUADRO ELECTRICO MONTADO SOBRE EL GRUPO CON TRANSFERENCIAL SEPARADO
Equipamiento: carta electronica de controllo, interruptor magnetotermico, cargador de bateria, llave quadro, transferencial separado.

QUADRO ELETTRICO MONTATO SUL GRUPPO ELETTROGENO CON TELECOMMUTAZIONE SEPARATA
Equipaggiamento: scheda elettronica di controllo, interruttore magnetotermico, carica batteria, chiave quadro, telecommutazione in armadio separato.

DSE 7320

CONTROL BOARD
CARTE ELECTRONIQUE DE CONTROL
CARTA ELECTRONICA DE CONTROL
SCHEDA ELETTRONICA DI CONTROLLO

GB	F	E	I
The DSE7320 is an Automatic Mains Failure Control Module designed to automatically start and stop diesel generating sets that include electronic and non electronic engines. The module also provides excellent genset monitoring and protection features.	La DSE7320 est une carte de contrôle projetée pour démarrer et arrêter automatiquement groupes électrogènes diesels avec moteurs électroniques et non électroniques. La carte représente un système excellent de contrôle et de protection du groupe électrogène.	La DSE7320 es una carta de control para arranquar y parar automáticamente grupos electrógenos diesel con motores electrónicos y no electrónicos. La carta constituye un excelente sistema de control y protección del grupo electrógeno.	La DSE7320 è una scheda di controllo progettata per avviare e arrestare automaticamente gruppi elettrogeni diesel con motori elettronici e non elettronici. La scheda costituisce un eccellente sistema di controllo e di protezione del gruppo elettrogeno.
FEATURES	**EQUIPEMENT**	**EQUIPMENT**	**EQUIPAGGIAMENTO**
Stop/reste – Auto – Manual – Start	Fiche électronique de contrôle DSE7320	Ficha electrónica de control DSE7320	Scheda elettronica di controllo DSE7320
LCD display scroll	Disjoncteur de protection	Interruptor magnetorermico	Interruttore magnetotermico
Event log view	Chargeur de batterie	Cargador de batería	Carica batteria
Acustic alarm	Bouton poussoir arrête d'émergence	Boton de parada de emergencia	Pulsante stop emergenza
DIGITAL MEASURING	**MESURES NUMERIQUES**	**MEDIDAS DIGITALES**	**MISURAZIONI DIGITALI**
Generator volts (3 phases)	Voltmètre générateur (3 phases)	Voltimetro (3 fases)	Voltmetro tensione generatore (3 fasi)
Generator amperes (3 phases)	Ampèremètre générateur (3 phases)	Amperimetro (3 fases)	Amperometro generatore (3 fasi)
Generator frequency	Fréquencemètre générateur	Frecuencimetro	Frequenzimetro generatore
KW-meter	KW-mètre	KW- metro	KW- metro
kVA-meter	kVA- mètre	kVA- metro	kVA- metro
Cos φ- meter	Cos φ- mètre	Cos φ-metro	Cos φ-metro
Rpm meter	Tm mètre	Revolutiones por minuto metro	Gm metro
Water temperature (optional)	Température eau (facultatif)	Termometro agua (opcional)	Temperatura acqua (facoltativo)
Oil pressure (optional)	Pression huile (facultatif)	Presión aceite (opcional)	Pressione olio (facoltativo)
Gen set hours counter	Totalisateur d'heures de marche	Medida horas de marcha	Contaore di funzionamento gruppo
Mains volts	Voltmètre secteur	Voltimetro tensión de red	Voltmetro tensione rete
Battery volts	Voltmètre batterie	Voltimetro batería	Voltmetro batteria
Mains frequency	Fréquence réseau	Frequencia red	Frequenza rete
Charging voltage	Tension de charge	Tensión de carga	Tensione di carica
Start-counter	Compteur démarrages	Numero de arranques	Contavviamenti
Fuel level %	Niveau combustible %	Nivel carburante %	Livello carburante %
INDICATORS	**INDICATEURS**	**INDICADORES**	**INDICATORI**
Mains live	Présence secteur	Presencia tensión de red	Presenza tensione di rete
Generator live	Présence tension générateur	Presencia tensión grupo	Presenza tensione generatore
Mains contactor closed	Inverseur secteur fermé	Transferencial red cerrado	Erogazione da rete
Generator contactor closed	Inverseur générateur fermé	Transferencial grupo cerrado	Erogazione da gruppo
Engine running	Moteur en marche	Motor en marcha	Motore avviato
PROTECTIONS	**PROTECTIONS**	**PROTECCIONES**	**PROTEZIONI**
Low oil pressure	Bas pression huile moteur	Baja presión aceite	Bassa pressione olio
High engine temperature	Haute température moteur	Elevada temperatura motor	Alta temperatura motore
Low fuel level	Bas niveau combustible	Baja nivel carburante	Basso livello di carburante
Fail to start	Non démarrage	Falta de arranque	Mancato avviamento
Fail to stop	Non arrêt	Falta de parada	Mancato arresto
Emergency stop	Arrêt d'urgence	Parada de emergencia	Stop d'emergenza
Over/under frequency	Sur/sous fréquence	Sobre/bajo frecuencia	Sovra/sotto frequenza
Over/under voltage	Sur/sous voltage	Sobre/bajo voltaje	Sovra/sotto voltaggio
Over/under speed	Sur/sous vitesse	Sobre/bajo velocitad	Sovra/sotto velocità
Fuel level	Niveau de combustible	nivel de combustibile	Livello del carburante
Belt breakage	Rupture courroie	Ruptura correa	Rottura cinghia
Over current	Surcourant	Corriente maxima	Sovracorrente
Over/under battery voltage	Sur/sus la tension de batterie	Sobre/bajo voltaje de la batería	Sovra/sotto tensione della batteria

SOUND PROOF VERSION DRAWING
DESSIN VERSION INSONORIZEE
DIBUJO VERSION INSONORISADA
DISEGNO VERSIONE INSONORIZZATA

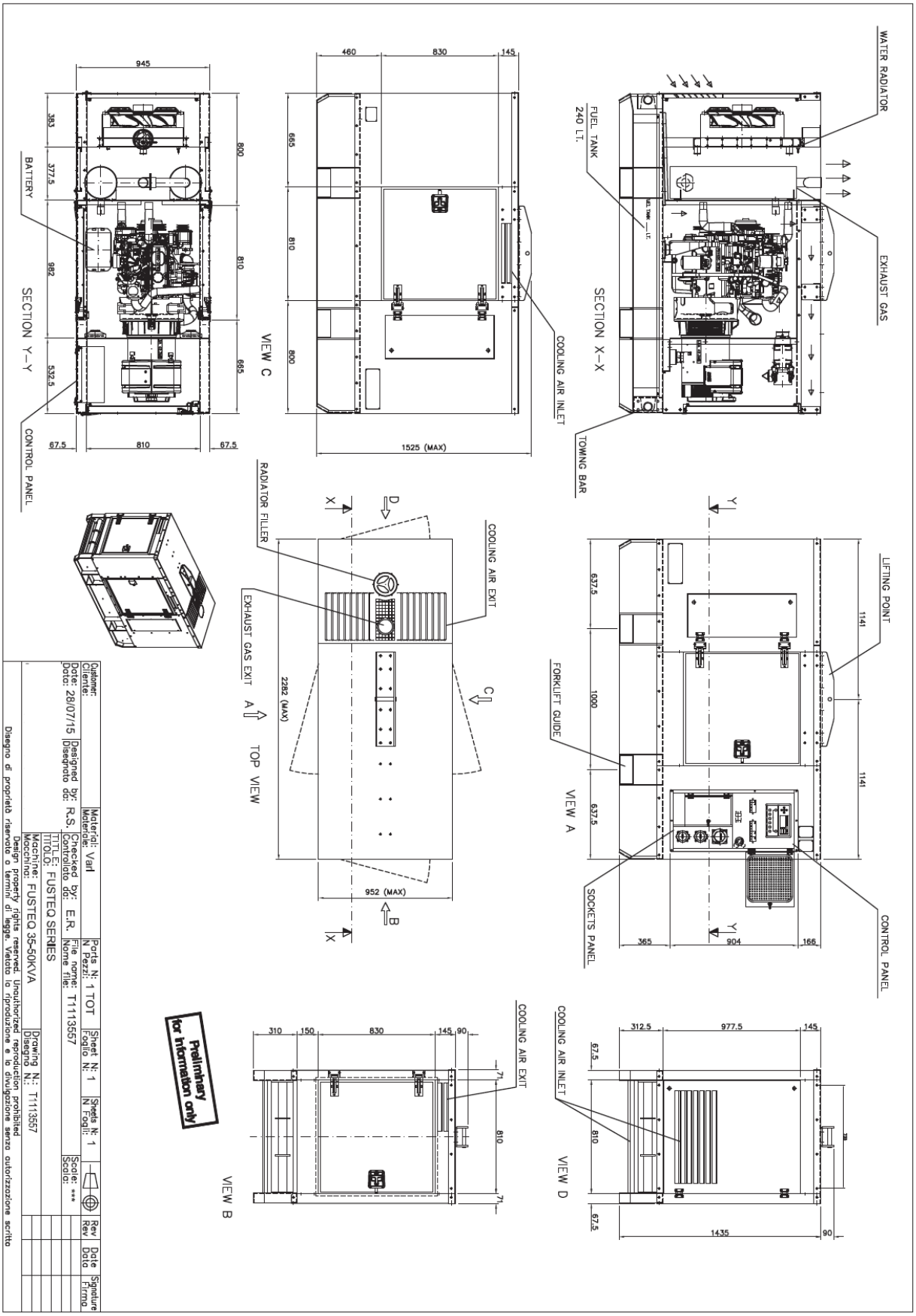

@Perkins®

Technical Data

1100 Series

1103A-33G

Gen Set

30,4 kWm @ 1500 rev/min
35,4 kWm @ 1800 rev/min

Basic technical data

Number of cylinders ... 3
Cylinder arrangement ... Vertical in-line
Cycle ... Four stroke
Induction system ... Naturally Aspriated
Compression ratio ... 19.25 : 1
Bore ... 105 mm (4.13 in)
Stroke ... 127 mm (4.99 in)
Cubic capacity ... 3.3 litres
Direction of rotation ... Clockwise view from front
Firing order ... 1,2,3
Total weight (engine only)
-dry ... 412 kg
-wet ... 430 kg

Overall dimensions

-height ... 951 mm (37.44 in)
-length ... 1029 mm (40.51 in)
-width (including mounting brackets) ... 629 mm (24.76 in)

Moment of inertia (mk²)

Engine:
- longitudinal ... 23.3 kgm²
- horizontal ... 38.1 kgm²
- axial ... 24.4 kgm²

Flywheel (polar) ... 1.14 kgm²

Centre of gravity (wet)

- forward from rear of block ... 210 mm (8.26 in)
- above centre line of block ... 120 mm (4.72 in)
- offset of RHS of centre line ... 40 mm (1.57 in)

Performance

Steady state speed stability at constant load:
- G2 ... ± 0.75%

Note: All data based on operation to ISO 3046/1, BS 5514 and DIN 6271 standard reference conditions.

Test conditions

Air temperature ... 25 °C
Barometric pressure ... 100 kPa
Relative humidity ... 30%

Sound level

Overall sound pressure level (cooling pack and air cleaner fitted):
- at 1500 rev/min ... 88.1dBA
- at 1800 rev/min ... 90.7dBA

Sound pressure level from the mean of 4 microphones at the front, left, right and above the engine. Exhaust was piped away out of the test cell.

If the engine is to operate in ambient conditions other than those of the test conditions, suitable adjustments must be made for these changes. For full details, contact Perkins Technical Service Department.

General installation

Designation	Units	Type of Operation and Application			
		Prime	Stand-by	Prime	Stand-by
		50 Hz	50 Hz	60 Hz	60 Hz
Gross engine power	kWm	28,2	31,0	33,2	36,5
Brake mean effective pressure	kPa (lbf/in²)	684 (99.2)	752 (109.0)	669 (97.0)	736 (106.7)
Mean piston speed	m/s (ft/s)	6,35 (20.8)	6,35 (20.8)	7,62 (25.0)	7,62 (25.0)
ElectropaK net engine power	kWm	27,7	30,4	32,2	35.4
Engine coolant flow 35 kPa restriction	l/min (UK gal/min)	125,5 (27.6)	125,5 (27.6)	151,0 (33.2)	151,0 (33.2)
Combustion air flow	m³/min (ft³/min)	2,16 (76.2)	2,15 (75.9)	2,6 (91.8)	2,57 (90.7)
Exhaust gas flow (max)	m³/min (ft³/min)	5,7 (201.2)	5,8 (204.8)	6,4 (226.0)	6,6 (233.0)
Exhaust gas temperature (max) in manifold	°C (°F)	500 (932)	520 (968)	520 (968)	530 (986)
Cooling fan air flow	m³/min (ft³/min)	53,0 (1871.6)	53,0 (1871.6)	70,0 (2472.0)	70,0 (2472.0)
Overall thermal efficiency	%	39,2	39,2	40,0	37.3
Typical genset electrical unit (0.8 pf 25° C	kWe	24,0	26,4	27,9	30,6
	kVA	30,0	33,0	34,9	38,2
Assumed alternator effiency	%	87			
Energy balance					
Power in fuel (Fuel heat of combustion)	kW (Btu/min)	72,0 (4098.2)	79,0 (4496.6)	83,0 (4724.3)	98,0 (5578.1)
Power output (gross)	kW (Btu/min)	28,2 (1605.1)	31,0 (1764.5)	33,2 (1889.7)	36,5 (2077.5)
Power to cooling fan	kW (Btu/min)	0,5 (28.4)	0,6 (34.1)	1,0 (56.9)	1,1 (62.6)
Power output (net)	kW (Btu/min)	27,7 (1576.6)	30,4 (1730.3)	32,2 (1832.8)	35,4 (2014.9)
Power to coolant and lubricating oil	kW (Btu/min)	16,0 (910.7)	18,0 (1024.5)	18,0 (1024.5)	22,0 (1252.2)
Power to exhaust	kW (Btu/min)	22,0 (1252.2)	25,0 (1422.9)	27,0 (1536.8)	34,0 (1935.2)
Power to radiation	kW (Btu/min)	5,0 (284.5)	6,0 (341.5)	5,0 (284.5)	6,0 (341.5)

Caution: *The airflows shown in this table will provide acceptable cooling for an open power unit operating in ambient temperatures of up to 53 °C (127 °F) or 46 °C (114.8 °F) if a canopy is fitted. If the power unit is to be enclosed totally, a cooling test should be done to check that the engine cooling is acceptable. If there is insufficient cooling, contact Perkins Technical Service Department.*

Cooling system

Radiator

- face area ... ... 0.276 m² (2.97 ft²)
- rows and materials ... ... single row aluminium
- matrix density and material ... ... Aluminium 12,5 fins/inch
- width of matrix ... ... 526 mm (20.7 in)
- height of matrix ... ... 524 mm (20.6 in)
- pressure cap setting ... ... 107 kPa

Fan

- diameter ... ... 457mm (18 in)
- drive ratio ... ... 0.85 : 1
- number of blades 7
- material ... ... Composite
- type ... ... Pusher

Coolant

Recommended coolant: 50 % ethylene glycol with a corrosion inhibitor (BS 658 : 1992 or MOD AL39) and 50% clean fresh water.
Total system capacity
- with radiator ... ... 10.2 l (21.5 pt)
- without radiator ... ... 4.4 l (9.2 pt)

Maximum top tank temperature ... ... 110 °C (230 °F)
Thermostat operating range ... ... 82 - 93 °C (180 - 199 °F)

Electrical system

Type ... ... Negative ground
Alternator voltage ... ... 12 V
Alternator output ... ... 65 amps
Starter motor voltage ... ... 12 V
Starter motor power ... ... 3 kW
Number of teeth on flywheel 126
Pull in current of starter motor solenoid ... ... 60 amps
Hold in current of starter motor solenoid ... ... 15 amps
Engine stop solenoid ... ... 12 V
Stop solenoid (minimum)
- pull in current ... ... 10 amps
- hold in current ... ... 10 amps

Cold start recommendations

Minimum cranking speed ... ... 120 rev/min

Starter specification

Starter motor type	Min. starting temp.	Lubricating oil viscosity SAE / battery type - values in CCA				
	°C (°F)	15W/40	15W/40	10W/40	5W/40	5W/30
12 volt 3.0 kW	-7 (19.4)	1 x 770				
	-10 (14) *		1 x 770			
	-15 (5) *			1 x 770		
	-20 (-4) *				1 x 900	
	-25 (-13) *					2 x 570

* - Glow plug start aid fitted.

Note: CCA - Cold Cracking Amps to SAEJ537.

Notes:

- Battery capacity is defined by the 20 hour rate
- If a change to a low viscosity oil is made, the cranking torque necessary at lower ambient temperatures is much reduced. The starting equipment has been selected to take advantage of this. It is important to change the appropriate multigrade oil in anticipation of operating in low ambient temperatures.
- Breakaway current is dependent on battery capacity available. Cables should be capable of handling the transient current which may be up to double the steady cranking current.

Exhaust system

Maximum back pressure
- 1500 rev/min ... ... 8 kPa
- 1800 rev/min ... ... 10 kPa

Exhaust outlet size ... ... 56 mm (2.2 in)

Fuel System

Type of injection ... ... Direct
Fuel injection pump ... ... Rotary
Fuel atomiser ... ... Multi-hole
Nozzel opening pressure ... ... 29,0 MPa (290 bar)

Fuel lift pump

Type ... ... Electrical
-flow/hour ... ... 120 - 150 l/h (211 - 264 pt/m)
-pressure ... ... 30 - 75 kPa (4.4 - 10.9 psi)
Maximum suction head:
- 1500 rev/min ... ... 17 kPa

Governor type

Electronic governor (optional) ... ... Woodward LCG2
Mechnical and electronic governor speed control to ... ISO 8528, G2

Fuel specification

Fuel Specification	European RF75-T-96 / DIN EN590 / BS2869 class A2
Density (kg/l @ 15 °C)	0,835 - 0,845
Viscosity (mm²/s @ 40 °C)	2,5 - 3,5
Sulphur content (%)	0,1 - 0,2
Cetane number	45 - 50

Fuel consumption litres/hour (UK gals/hr)

	Power rating				
Speed	**110%**	**100%**	**75%**	**50%**	**25%**
1500	7,9 (1.73)	7,1 (1.56)	5,4 (1.18)	3,9 (0.85)	2,5 (0.54)
1800	9,5 (2.08)	8,6 (1.89)	6,6 (1.45)	4,9 (1.07)	3,1 (0.68)

Induction system

Maximum air intake restriction

-clean filter ... ... 3,0 kPa
- dirty filter ... ... 6,5 kPa
- air filter type ... ... Dry

Lubrication system

Lubricating oil capacity

Total system ... ... 8,3 l (17.5 pt)
Sump minimum ... ... 6,2 l (13.1 pt)
Sump maximum ... ... 7.8 l (16.4 pt)
Maximum engine operating angles:
- front up, front down, right side or left side ... ... 25°

Lubricating oil pressure

- relief valve opens ... ... 415 - 470 kPa
- at maximum no-load speed ... ... 276 - 414 kPa

Max continuous oil temperature (in rail) ... ... 125 °C (257 °F)
Oil consumption at full load as a % of fuel consumption 0.15%

1103A-33G ElectropaK - left view

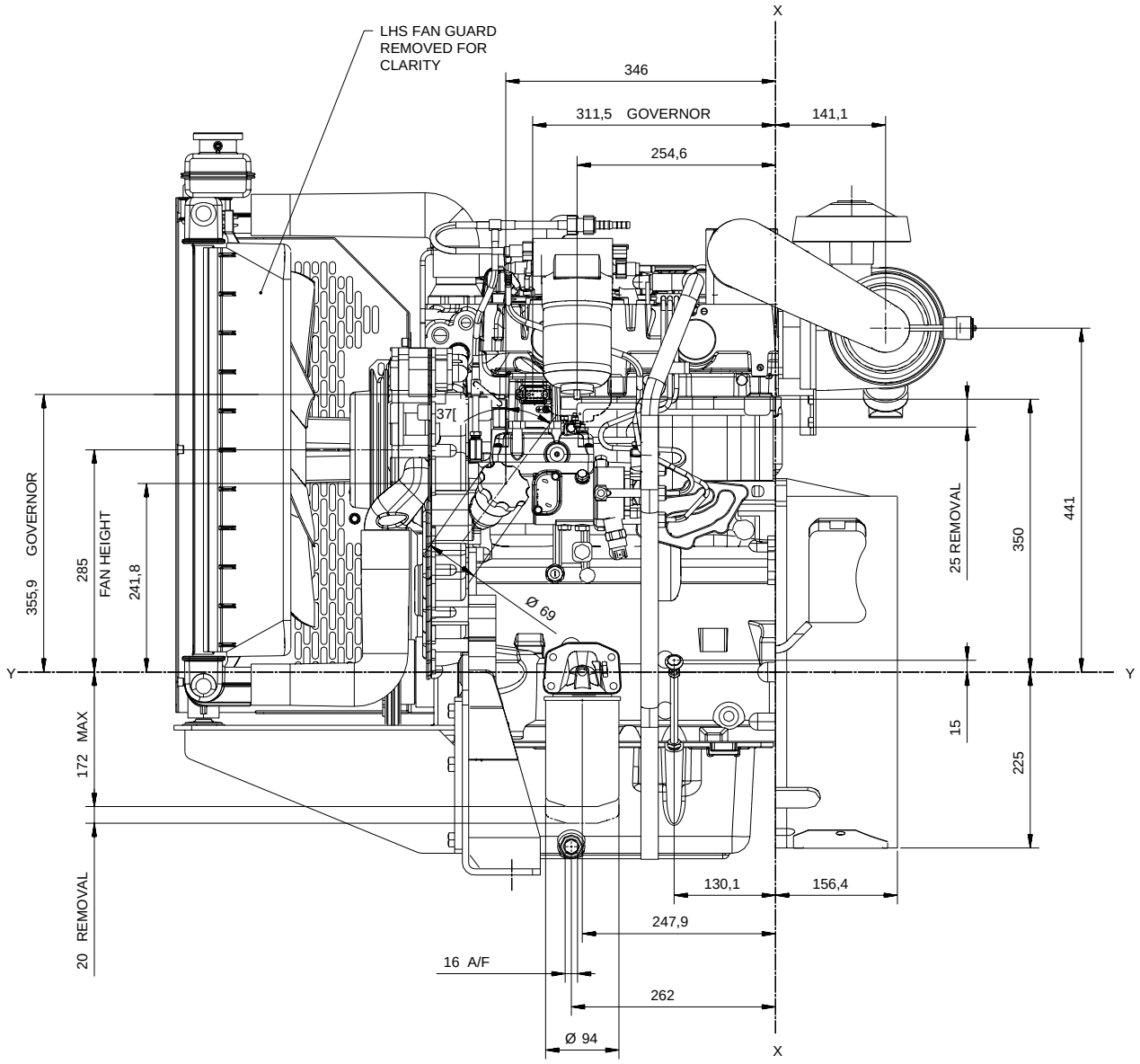

1103A-33G ElectropaK - front view

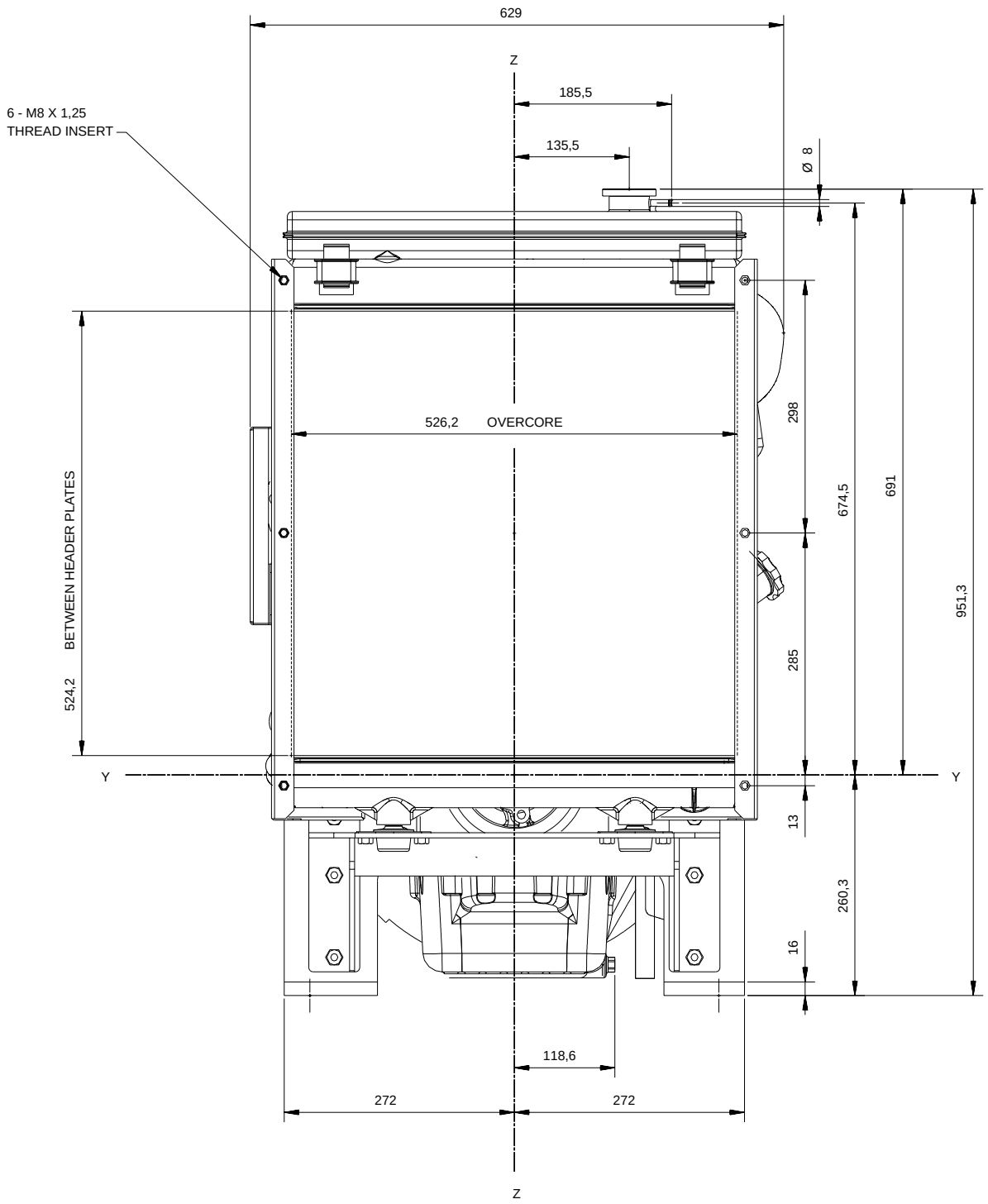

1103A-33G ElectropaK - right view

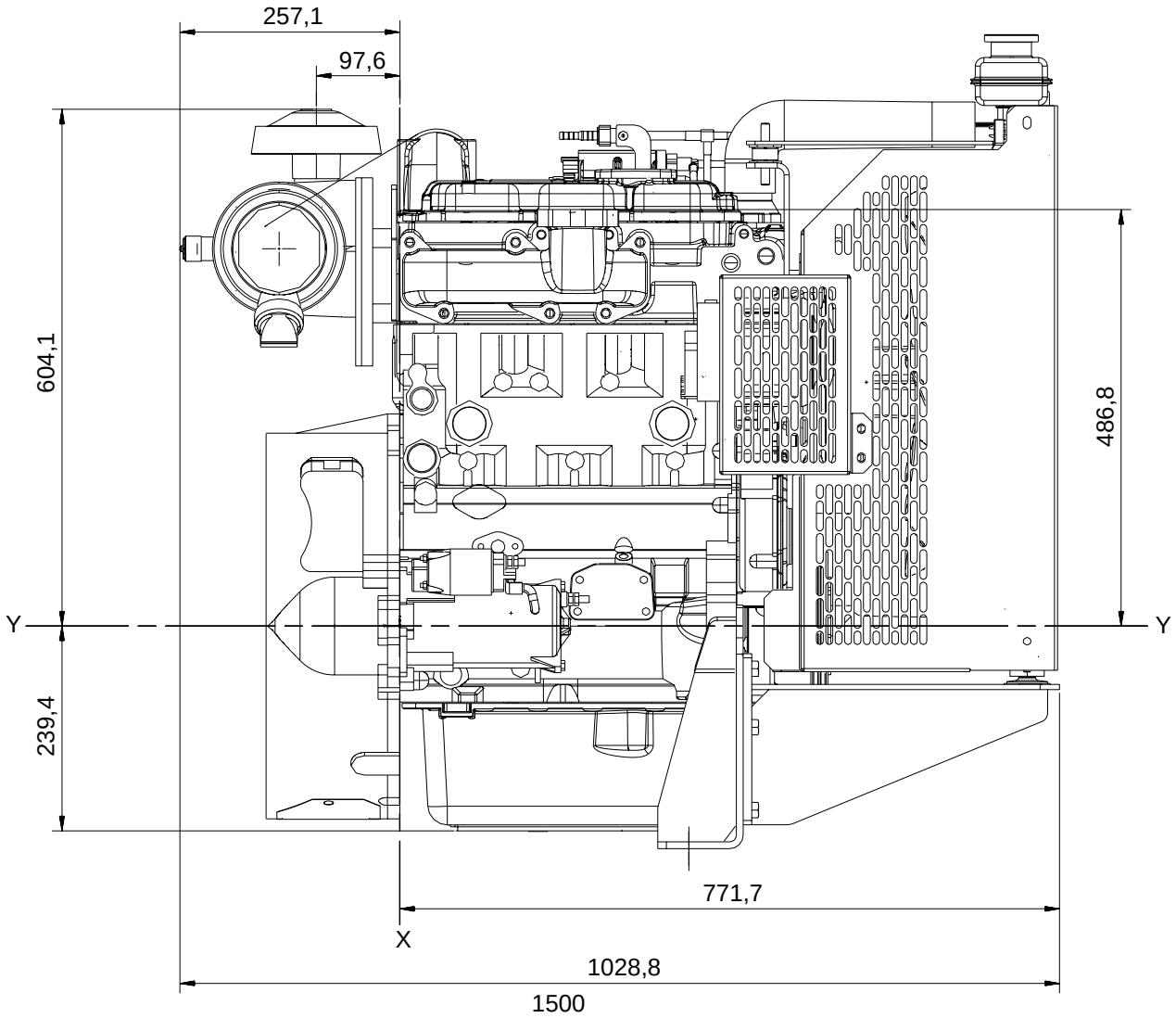

1103A-33G ElectropaK - rear view

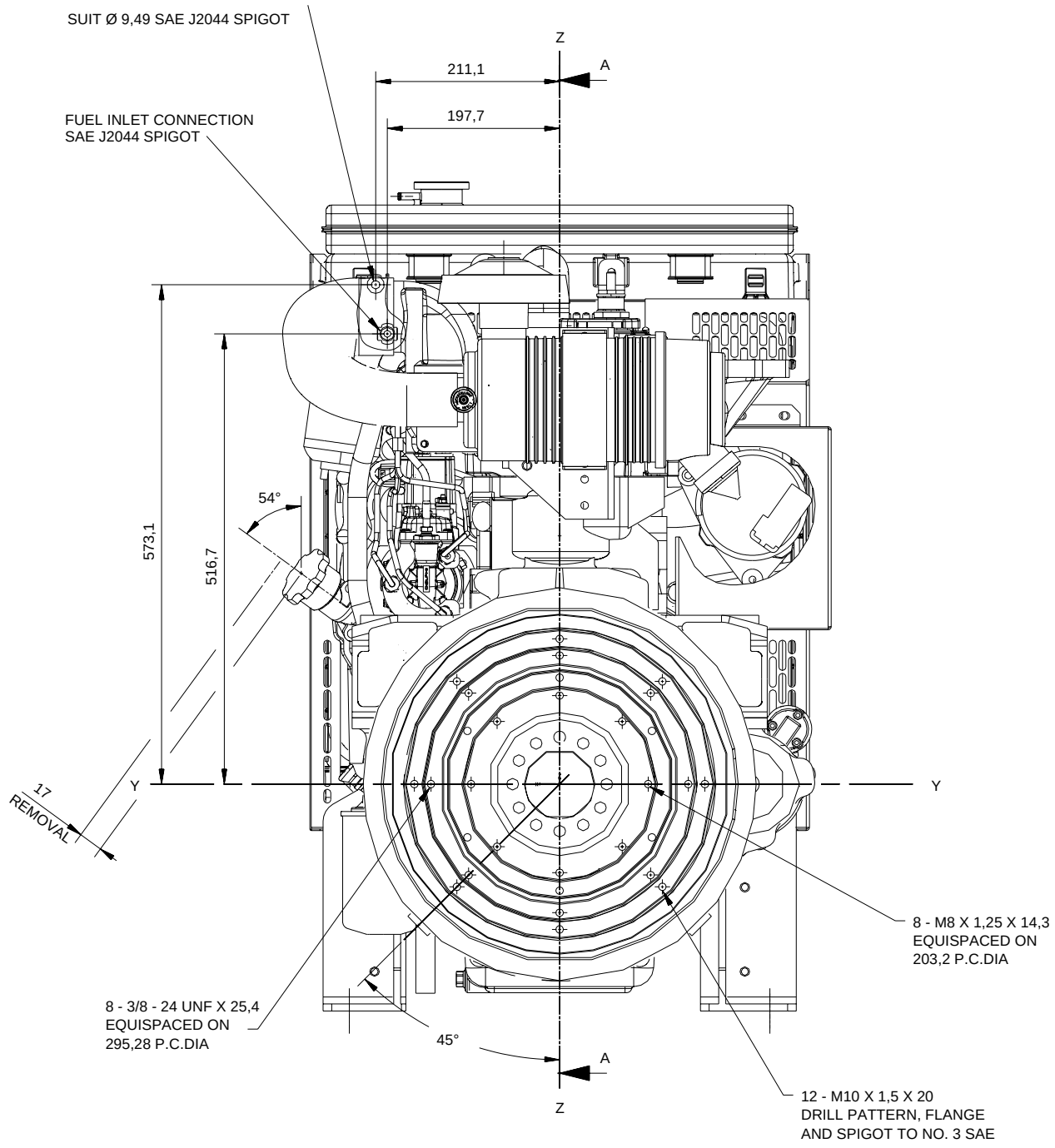

Recommended SAE viscosity

A single or multigrade oil must be used which conforms to APi-CG4 / CH4, see illustration below:

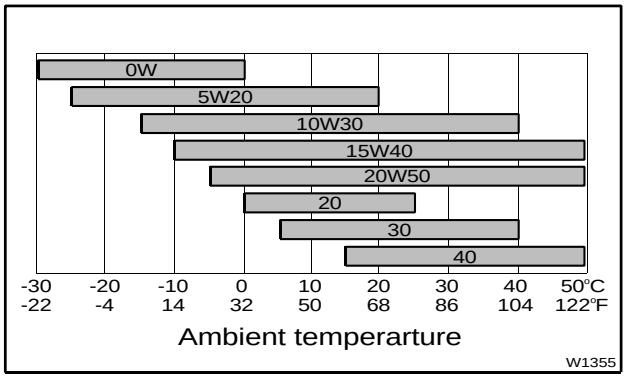

Mountings

Maximum static bending moment
at rear face of block ... ... 791 Nm (583 lb/ft)

Load Acceptance

Inital load acceptance when engine reaches rated speed (15 seconds max after engine starts to crank)			
	Units	**1500 rev/min**	**1800 rev/min**
Prime Power	%	90	90
Load	kWm (kWe)	25,7 (21.8)	29,4 (24.7)
Transient Frequency Deviation	%	< -10%	< -10%
Frequency Recovery	Second	<1	<1

The above complies with requirements of Classification 3 & 4 of ISO 8528 - 12 and G2 operating limits stated in ISO 8528 - 5.

The above figures were obtained under test conditions as follows:
- alternator efficiency.. ... ... 87%
- minimum ambient temperature ... ... 15 °C

Isochronous Governing:
- typical alternator inertia ... ... 0.1676 kgm²

All tests were conducted using an engine installed and serviced to Perkins Engine Company Limited recommendations.

The information given in this document is for guidance only.

@Perkins®

Perkins Engines Company Limited

Peterborough PE1 5NA United Kingdom
Telephone +44 (0) 1733 583000
Fax +44 (0) 1733 582240
www.perkins.com

All information in the document is substantially correct at the time of printing but may be subsequently altered by the company.

Distributed by

Publication No. TPD1488E, Issue 2. Perkins Confidential: GREEN. © Perkins Engines Company Limited.

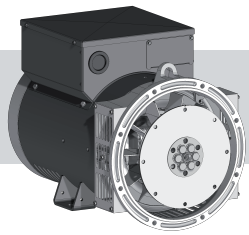

meccalte

Member of CISQ Federation RINA ISO 9001:2008 Certified Quality System

ECP28

MECCALTE spa - Via Roma, 20 - 36051 CREAZZO (VI) ITALIA
Tel. +39 0444/396111 - Fax +39 0444/396166 - e-mail : info@meccalte.it
web site: www.meccalte.com

4 POLE A

CHARACTERISTICS

INDUSTRIAL RATINGS

ambient 40° C

Type	kVA - cos φ 0.8 - 3 Phase continuous							Efficiency η % CL. H (ΔT= 125 °C)			1 Phase kVA
50 Hz	CL. H (ΔT= 125 °C)				CL. F (ΔT= 105 °C)						
Series Star Y Parallel Star YY Series Delta Δ Parallel Delta ΔΔ	380 190 220 110	400 200 230 115	415 208 240 120	IP45 400 V	380 190 220 110	400 200 230 115	415 208 240 120	2/4	3/4	4/4	COS φ 1 CL. H (ΔT = 125 °C) DELTA
ECP28-1VS/4	7,8	**7,8**	7,8	6,6	7	**7**	7	83,5	86,0	85,8	5
ECP28-2VS/4	11	**11**	11	9,3	10	**10**	10	83,8	86,5	86,2	7
ECP28-0S/4	13,5	**13,5**	13,5	11,5	12,5	**12,5**	12,5	84,4	86,9	86,6	8,5
ECP28-S/4	17	**17**	17	14,5	16	**16**	16	85,4	87,4	87,2	11,5
ECP28-M/4	20	**20**	20	17	18,5	**18,5**	18,5	85,6	87,8	87,4	13,5
ECP28-2L/4	25	**25**	25	21	23	**23**	23	86,1	88,1	87,8	16,5
ECP28-VL/4	30	**30**	30	24	26	**26**	26	86,5	88,5	88,1	19

60 Hz	CL. H (ΔT= 125 °C)				CL. F (ΔT= 105 °C)			Efficiency η % CL. H (ΔT= 125 °C)			1 Phase kVA
Series Star Y Parallel Star YY Series Delta Δ Parallel Delta ΔΔ	440 220 254 127	460 230 265 133	480 240 277 138	IP45 480 V	440 220 254 127	460 230 265 133	480 240 277 138	2/4	3/4	4/4	COS φ 1 CL. H (ΔT = 125 °C) DELTA
ECP28-1VS/4	8,8	9,4	**9,4**	8	7,8	8,5	**8,5**	84,5	87,0	86,9	6,3
ECP28-2VS/4	12,4	13,2	**13,2**	11	11	12	**12**	84,8	87,6	87,3	8,8
ECP28-0S/4	15	16,2	**16,2**	13,5	13,5	15	**15**	85,5	88,0	87,7	10,8
ECP28-S/4	18,6	20,4	**20,4**	17,5	17,5	19	**19**	86,2	88,6	88,7	13,5
ECP28-M/4	23	24	**24**	20,5	20	22	**22**	87,5	89,5	89,5	16
ECP28-2L/4	27,5	30	**30**	25	25,5	27,5	**27,5**	88	90	89,7	20
ECP28-VL/4	36	36	**36**	29	32	32	**32**	88,4	90,3	89,8	23

STANDBY RATINGS

Type	kVA Temp. Rise / Ambient °C 50 Hz			kVA Temp. Rise / Ambient °C 60 Hz		
	163° / 27°	150° / 40°	125° / 27°	163° / 27°	150° / 40°	125° / 27°
ECP28-1VS/4	8,4	8	8	10	9,7	9,7
ECP28-2VS/4	11,7	11,3	11,3	14	13,6	13,6
ECP28-0S/4	14,6	14	14	17,5	16,7	16,7
ECP28-S/4	18	17,5	17,5	21,6	21	21
ECP28-M/4	21,5	20,5	20,5	25,8	24,6	24,6
ECP28-2L/4	26,5	25,5	25,5	31,8	30,6	30,6
ECP28-VL/4	32,5	30,5	30,5	38,4	36,6	36,6

Type	J (kgm²) B3/B14 FORM	Weight SAE (kg)	Air Volume 50 Hz (m³/min)	Air Volume 60 Hz (m³/min)	Noise dB(A) 50 Hz 1m	Noise dB(A) 50 Hz 7m	Noise dB(A) 60 Hz 1m	Noise dB(A) 60 Hz 7m
ECP28-1VS/4	0,0711	79	5,3	5,8	68	57	71	61
ECP28-2VS/4	0,0821	86						
ECP28-0S/4	0,0904	96						
ECP28-S/4	0,1041	104						
ECP28-M/4	0,1182	115						
ECP28-2L/4	0,1421	136						
ECP28-VL/4	0,1636	162						

ACCESSORIES

REGULATOR				PARALLEL DEVICE	THERMAL PROTECTION			HEATERS	MECHANICAL PROTECTION	
DSR	DER-1	SR7/2	UVR6		PTC	BIMET. DEVICE	PT100		IP23	IP45
●	□	□	□	□*	□	□	□	□	●	□

● = Standard
□ = Optional
* available if requested when placing the order

Rating

INSULATION SYSTEM E309573 on request

OVERALL DIMENSIONS B3-B14 FORM

dimensions in mm

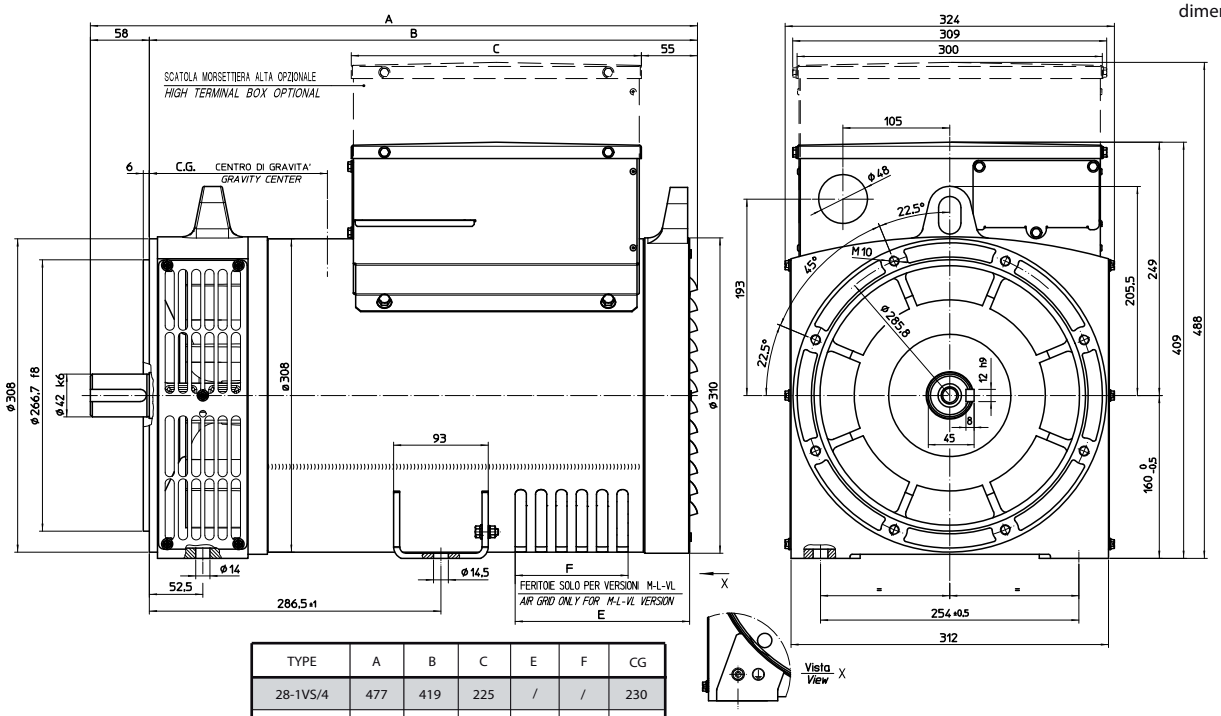

TYPE	A	B	C	E	F	CG
28-1VS/4	477	419	225	/	/	230
28-2VS/4	477	419	225	/	/	230
28-0S/4	517	459	285	/	/	235
28-S/4	517	459	285	/	/	237
28-M/4	552	494	285	131,5	71	250
28-2L/4	597	539	285	171,5	111	275
28-VL/4	627	569	285	171,5	111	286

OVERALL DIMENSIONS MD35 FORM

dimensions in mm

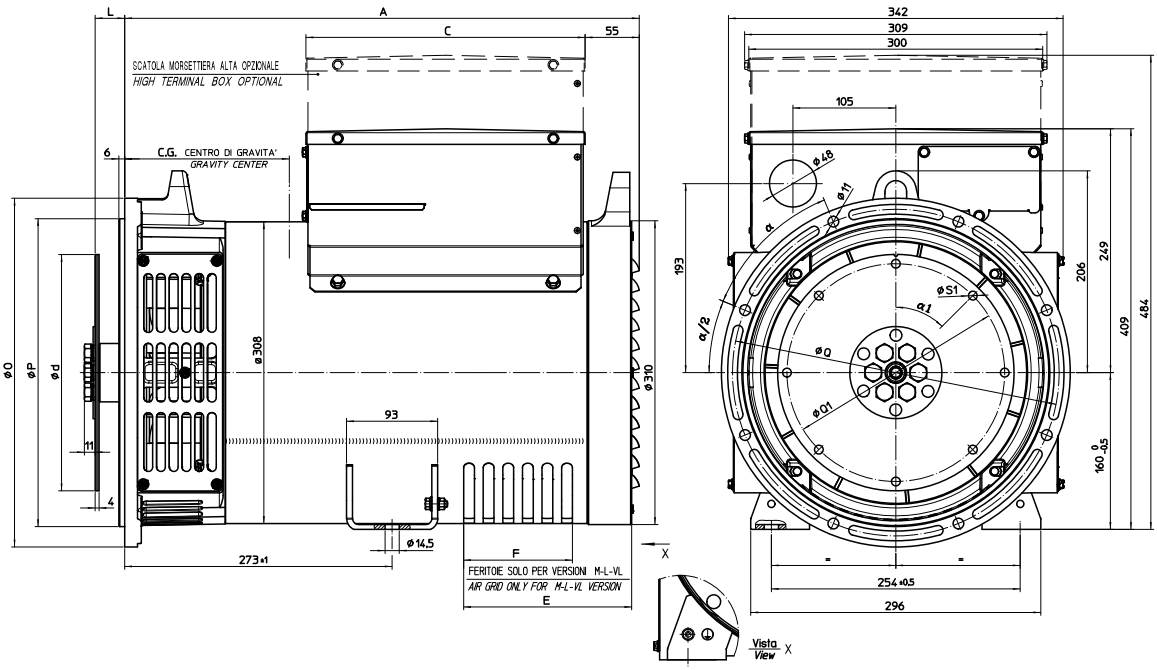

TIPO / TYPE	A	C	E	F	CG
28-1VS/4	405	225	/	/	200
28-2VS/4	405	225	/	/	200
28-0S/4	445	285	/	/	214
28-S/4	445	285	/	/	217
28-M/4	480	285	131,5	71	238
28-2L/4	525	285	171,5	111	254
28-VL/4	555	285	171,5	111	274

SAE N.	GIUNTI A DISCHI DISC COUPLING DISQUE DE MONOPALIER SCHEIBENKUPPLUNG				
	L	d	Q1	S1	α1
6 1/2	30,2	215,9	200	9	60°
7 1/2	30,2	241,3	222,25	9	45°
8	62	263,52	244,47	11	60°
10	53,8	314,32	295,27	11	45°
11 1/2	39,6	352,42	333,37	11	45°

SAE N.	FLANGIE FLANGE BRIDE FLANSCHE BRIDAS			
	O	P	Q	α
5	356	314,3	333,4	45°
4	403	362	381	30°
3	451	409,6	428,6	30°
2	490	447,7	466,7	30°

DSECONTROL®
MONITORING WITH INTELLIGENCE.

DSE7310 & DSE7320

AUTO START & AUTO MAINS FAILURE CONTROL MODULES (COMMUNICATIONS & EXPANSION)

The DSE7310 and DSE7320 are control modules for single gen-set applications. The modules have been developed from the successful DSE5310 and DSE5320 Series and incorporate a number of advanced features to meet the most demanding on-site applications.

The DSE7310 is an Automatic Start Control Module and the DSE7320 is an Auto Mains (Utility) Failure Control Module. Both modules have been designed to start and stop diesel and gas generating sets that include electronic and non-electronic engines. The DSE7320 includes the additional capability of being able to monitor a mains (utility) supply.

Both modules include USB, RS232 and RS485 ports as well as dedicated DSENet® terminals for expansion device connectivity.

The modules are simple to operate and feature a user-friendly menu layout for improved clarity. Enhanced features include a real time clock for enhanced event and performance monitoring, ethernet communications for low cost monitoring, mutual standby (DSE7310 only) to reduce engine wear and tear and preventative maintenance features to detect engine part faults prior to a major problem occurring.

FEATURES

- Backed up real time clock
- 132 x 64 pixel LCD display
- Configurable display languages
- Five-key menu navigation
- Fully configurable via PC software
- LED and LCD alarm indication
- Engine exercise mode
- Configurable start & fuel outputs
- kWh monitoring
- Automatic load transfer
- Eight configurable digital inputs
- Six configurable outputs
- Configurable timers and alarms
- Modbus RTU
- Magnetic pick-up
- Selected front panel programming
- Multiple date and time exercise scheduler
- SMS messaging (additional external modem required)
- Power save mode
- User selectable RS232 & RS485 communications
- DSENet® compatible
- Ethernet communications via DSE860/865
- Multiple date and time maintenance scheduler
- Configurable display pages
- Programmable load shedding/acceptance
- Preventative maintenance
- kW overload protection
- Unbalanced load protection
- Flexible sender input
- Configurable SCADA output page
- True dual mutual standby with load balancing timer (DSE7310 only)
- Fan control for additional cooling
- 'Protections Disabled' facility
- Fuel usage monitoring and low fuel alarm
- Support for up to three remote display units
- Automatic sleep mode
- Easy access, configurable diagnostics page shows summary of output states
- Improved programmable event log (250) showing date and time
- Manual fuel pump control
- 3 alternative configurations
- Multiple date and time scheduler
- 3 Programmable Maintenance alarms with comms alert
- Customisable status screens
- Low fuel level alarm delay
- Charge alternator fail warning and shutdown alarms with user programmable delay
- Independent Earth fault trip
- Sleep mode
- Load switching (Load shedding and dummy load outputs)
- Manual speed trim (on CAN engines that support this feature)
- Additional display screens to help with modem diagnostics
- Security levels – PC software has password system to control access to PC software features
- Operator configurable virtual LEDs visible in SCADA

NEW FEATURES

- Additional programmable logic
- Improved modem diagnostics
- Remote control sources (10) can be accessed via SCADA
- Additional electrical trip options
- Additional start delay functions
- Oil pressure values from additional engines
- Front panel editing of scheduler
- Displays kW as % of rated kW setting

SPECIFICATION

DC SUPPLY

CONTINUOUS VOLTAGE RATING
8V to 35V Continuous

CRANKING DIP PROTECTION
Able to survive 0V for 50mS, providing supply was at least 10V before dropout and supply recovers to 5V. This is achieved without the need for internal batteries

CHARGE FAIL/ EXCITATION
0V to 35V fixed power source 2.5W

MAXIMUM STANDBY CURRENT
160mA at 12V 80mA at 24V

MAXIMUM OPERATING CURRENT
340mA at 12V 160mA at 24V

ALTERNATOR INPUT

RANGE
15V - 333V (L-N) 50Hz - 60Hz
(Minimum 15V AC Ph-N)

ACCURACY
1% of full scale true RMS sensing

SUPPORTED TOPOLOGIES
3 phase 4 wire
3 phase 3 wire
3 phase 4 wire Delta
Single phase 2 wire
2 phase 3 wire L1 & L2
2 phase 3 wire L1 & L3

MAINS/UTILITY INPUT (DSE7320 ONLY)

RANGE
15V - 333V (L-N) 50Hz - 60Hz
(Minimum 15V AC Ph-N)

ACCURACY
1% of full scale true RMS sensing

SUPPORTED TOPOLOGIES
3 phase 4 wire
3 phase 3 wire
3 phase 4 wire Delta
Single phase 2 wire
2 phase 3 wire L1 & L2
2 phase 3 wire L1 & L3

CT'S

BURDEN
0.5VA

PRIMARY RATING
1A - 8000A (user selectable)

SECONDARY RATING
1A or 5A secondary (user selectable)

ACCURACY OF MEASUREMENT
1% of full load rating

RECOMMENDATIONS
Class 1 required for instrumentation
Protection class required if using for protection

Continued on page 2

SPECIFICATION

MAGNETIC PICKUP

VOLTAGE RANGE
+/- 0.5V minimum (during cranking) to 70V peak

FREQUENCY RANGE
10,000 Hz (max)

OUTPUTS

OUTPUT A (FUEL)
15 Amp DC at supply voltage

OUTPUT B (START)
15 Amp DC at supply voltage

OUTPUTS C & D
8 Amp 250V (Volt free)

AUXILIARY OUTPUTS E,F,G,H
2 Amp DC at supply voltage

DIMENSIONS

OVERALL
240mm x 181.1mm x 41.7mm
9.4" x 7.1" x 1.6"

PANEL CUT-OUT
220mm x 160mm
8.7" x 6.3"
Max panel thickness 8mm (0.3")

ENVIRONMENTAL TESTING STANDARDS

ELECTRICAL SAFETY
BS EN 60950
Safety of Information Technology Equipment, including Electrical Business Equipment

ELECTRO MAGNETIC COMPATIBILITY
BS EN 61000-6-2
EMC Generic Immunity Standard for the Industrial Environment
BS EN 61000-6-4
EMC Generic Emission Standard for the Industrial Environment

TEMPERATURE (OPERATING)
BS EN 60068
Test Ab to +70°C 60068-2-2 Hot
Test Ab to -30°C 60068-2-1 Cold

VIBRATION
BS EN 60068-2-6
Ten sweeps in each of three major axes
5Hz to 8Hz @ +/-7.5mm, 8Hz to 500Hz @ 2gn

HUMIDITY
BS 2011 part 2.1 60068-2-30
Test Cb Ob Cyclic
93% RH @ 40°C for 48 hours

SHOCK
BS EN 60068-2-27
Three shocks in each of three major axes
15gn in 11mS

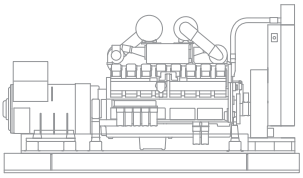

ELECTRONIC ENGINE CAPABILITY

BENEFITS

- 132 x 64 pixel ratio makes information easy to read
- Real time clock provides accurate event logging
- PC software is license free
- Set maintenance periods can be configured to maintain optimum engine performance
- Ethernet communications provides advanced remote monitoring at low cost
- Modules can be integrated into building management systems
- Preventative maintenance avoids expensive engine down time
- Advanced PCB layout ensures high reliability
- Robust design
- Extensive performance monitoring

OPERATION

The modules are operated via the START, STOP, AUTO and MANUAL soft touch membrane buttons on the front panel. The DSE7320 also has a TEST button. Both modules include load switch buttons. The main menu system is accessed using the five navigation buttons to the left of the LCD display.

CONFIGURATION

The modules can be configured using the front panel buttons or by using the DSE Configuration Suite PC software and a USB lead.

COMMUNICATIONS

The DSE7310 & DSE7320 have a number of different communication capabilities.

SMS Messaging

When the module detects an alarm condition, it has the ability to send an SMS message to a dedicated mobile number (s), notifying an engineer of the exact time, date and reason why the engine failed (GSM Modem and SIM Card required).

Remote Communications

When the module detects an alarm state, it dials out to a PC notifying the user of the condition (Modem required).

Remote Control

The module can be controlled remotely using either a GSM Modem, Ethernet via DSE860/865 or via RS485. Using a modem allows the module to be controlled from any distance. Using RS485 limits the distance to 1km (0.6 miles).

Building Management

The module has been designed to be integrated into new and existing building management systems, using RS485.

PC Software

The module has the ability to be configured and monitored from a remote PC, using the PC software and a USB lead.

INPUTS & OUTPUTS

Analogue inputs are provided for oil pressure, coolant temperature and fuel level. These connect to conventional engine mounted resistive sensor units to provide accurate monitoring and protection facilities. They can also be configured to interface with digital switch type inputs for low oil pressure and high coolant temperature shutdowns. Eight user configurable digital inputs are also included, plus one flexible sender.

Outputs are provided for fuel solenoid, start solenoid and six additional configurable outputs. On these configurable outputs a range of different functions, conditions or alarms can be selected.

INSTRUMENTATION

The modules provide advanced metering facilities, displaying the information on the LCD display. The information can be accessed using the five-key menu navigation to the left of the display.

7310	7320
Generator Instruments Volts, Hz, Amps, kW, kVA, Pf, kWh, kVAr, kVArh, KVAh	**Generator Instruments** Volts, Hz, Amps, kW, kVA, Pf, kWh, kVAr, kVArh, KVAh
Engine Instruments RPM, Oil Pressure, Coolant Temperature, Hours Run, Charging Voltage, Battery Volts.	**Engine Instruments** RPM, Oil Pressure, Coolant Temperature, Hours Run, Charging Voltage, Battery Volts.
Electronic Engines Enhanced Instrumentation and Engine ECU diagnostics via electronic engine interface.	**Electronic Engines** Enhanced instrumentation and Engine ECU diagnostics via electronic engine interface.
	Mains/Utility Instruments Volts, Frequency, Amps (optional when CT's are fitted load side of the line)

DSENET®

DSENet® is a collection of expansion modules that have been created to work with DSENet® compatible control modules. DSENet® allows up to 20 different expansion devices to be used at a time. The expansion modules available are:

- DSE2157 Relay Output Expansion Module
- DSE2130 Input Expansion Module
- DSE2548 Annunciator Module Remote Display Module
- DSE2510 Remote Display
- DSE2520 Remote Display

EVENT LOG

The module includes a comprehensive event log that shows the most recent 250 alarm conditions and the date and time that they occurred. This function assists the user when fault finding and maintaining a generating set.

ELECTRONIC ENGINE COMPATABILITY

- CAT
- Cummins
- Deutz
- John Deere
- MTU
- Perkins
- Scania
- Volvo
- IVECO
- Generic
- Plus additional manufacturers

RELATED MATERIALS

TITLE	PART NO'S
DSE7xxx Manual	057-074
DSE72xx/73xx PC Software Manual	057-077
DSE2130 Data Sheet	053-060
DSE2157 Data Sheet	053-061
DSE2548 Data Sheet	053-062
DSE860/865 Data Sheet	055-071
DSE2510/20 Data Sheet	055-074

DSE7310 & DSE7320

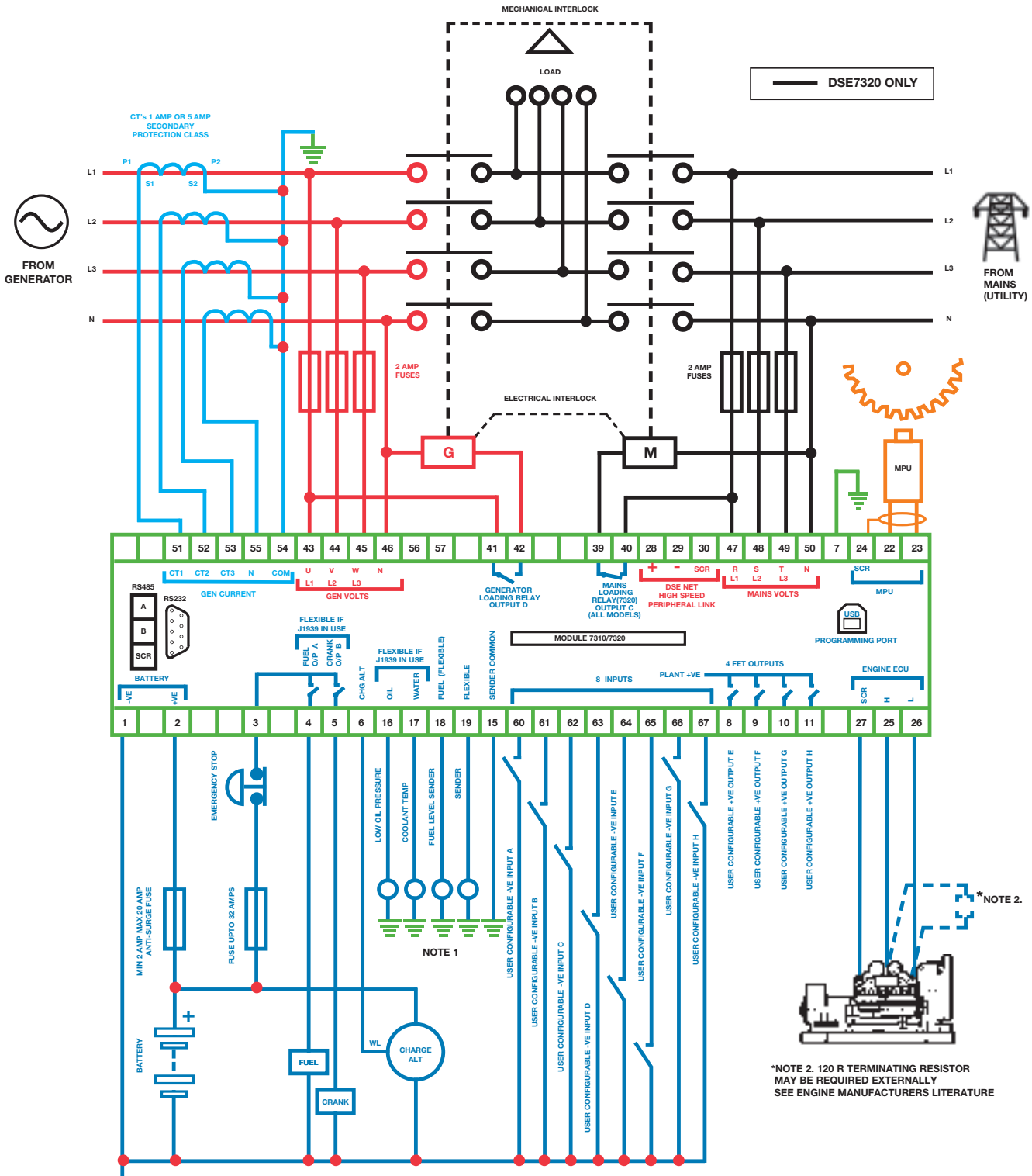

BATTERY NEGATIVE MUST BE GROUNDED

TERMINALS SUITABLE FOR 22-16 AWG (0.6mm - 1.3mm) FIELD WIRING

TIGHTENING TORQUE = 0.8Nm (7lb-in)

NOTE 1
THESE GROUND CONNECTIONS MUST BE ON THE ENGINE BLOCK, AND MUST BE TO THE SENDER BODIES. THE GROUND WIRE TO TERMINAL 15 MUST NOT BE USED TO PROVIDE A GROUND CONNECTION TO ANY OTHER DEVICE

DEEP SEA ELECTRONICS PLC
Highfield House
Hunmanby Industrial Estate
Hunmanby, North Yorkshire
YO14 0PH England

TELEPHONE
+44 (0)1723 890099

FACSIMILE
+44 (0)1723 893303

EMAIL
sales@deepseaplc.com

WEBSITE
www.deepseaplc.com

Registered in England & Wales No.01319649

VAT No.316923457

DEEP SEA ELECTRONICS INC
3230 Williams Avenue
Rockford
IL 61101-2668 USA

TELEPHONE
+1 (815) 316 8706

FACSIMILE
+1 (815) 316 8708

EMAIL
sales@deepseausa.com

WEBSITE
www.deepseausa.com

YOUR LOCAL DISTRIBUTOR.

DEEP SEA ELECTRONICS PLC maintains a policy of continuous development and reserves the right to change the details shown on this data sheet without prior notice. The contents are intended for guidance only.

This data sheet is printed on 9lives 55 Silk, which is produced with 55% recycled fibre from both pre and post-consumer sources, together with 45% virgin ECF fibre.

055-051/10/09 (5)